US010676225B2

(12) **United States Patent**
Malcolm

(10) **Patent No.: US 10,676,225 B2**
(45) **Date of Patent: *Jun. 9, 2020**

(54) **CONTAINER COMPRISING INTEGRAL FILM LID**

(71) Applicant: **DIRECT PACK, INC.,** Azusa, CA (US)

(72) Inventor: **Christian Damian Malcolm,** Thousand Oaks, CA (US)

(73) Assignee: **Direct Park, Inc.,** Azusa, CA (US)

(*) Notice: Subject to any disclaimer, the term ofthis patent is extended or adjusted under 35 U.S.C. 154(b) by 33 days.

This patent is subject to a terminal disclaimer.

(21) Appl. No.: **15/983,281**

(22) Filed: **May 18, 2018**

(65) **Prior Publication Data**

US 2018/0265236 Al Sep. 20, 2018

Related U.S. Application Data

(63) Continuation of application No. 15/042,606, filed on Feb. 12, 2016, now Pat. No. 10,000,303.

(51) **Int. Cl.**
B65B 51110 (2006.01)
B65D 43116 (2006.01)

(52) **U.S. Cl.**
CPC.....***B65B 51110*** (2013.01); ***B65D 431162*** (2013.01); *B65D 2543/0024* (2013.01);
(Continued)

(58) **Field of Classification Search**
CPC.....B65B 51/10; B65D 43/162; B65D 2543/00314; B65D 2543/00296;
(Continued)

(56) **References Cited**

U.S. PATENT DOCUMENTS

2,887,244 A 5/1959 Betner
3,272,422 A 9/1966 Miller
(Continued)

FOREIGN PATENT DOCUMENTS

CA 1307240 C 9/1992
CA 1320920 C 8/1993
(Continued)

OTHER PUBLICATIONS

International Search Report and Written Opinion for International Application No. PCT/US2016/017739.
(Continued)

Primary Examiner - James N Smalley
(74) *Attorney, Agent, or Firm* - Frost Brown Todd LLC

(57) ABSTRACT

A container of the present invention may include a base, a lip extending around the periphery of the base, a perforation defined by the lip, and a lid adhered to the lip, wherein the lid includes a first undercut, wherein the first undercut overlaps the perforation. The perforation and undercut allow for a portion of the lid to remain on the lip after the lid has been opened. The portion remaining on the lid may include an outwardly facing adhesive surface, configured to adhere to the lid to reseal the lid to the base once the lid is closed after the initial opening. As such, the lid is permanently adhered to a first portion of the lip and resealably adhered to a second portion of the lip. The first portion may be an outer lip portion and the second portion may be an inner lip portion.
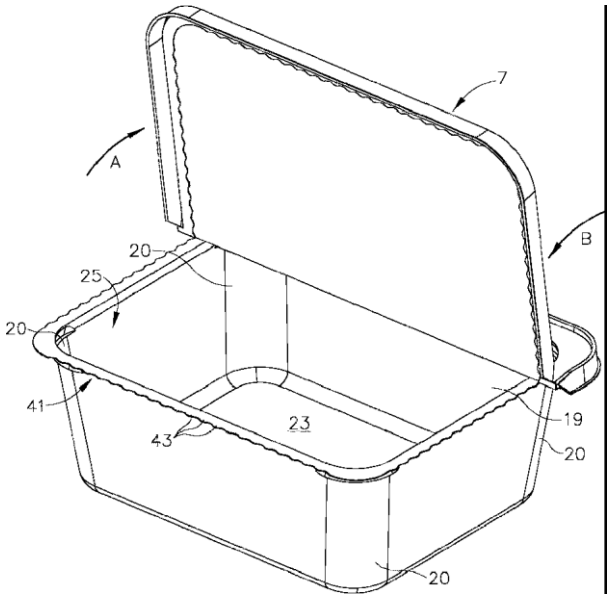
20 Claims, 9 Drawing Sheets